Code Practice Osc.
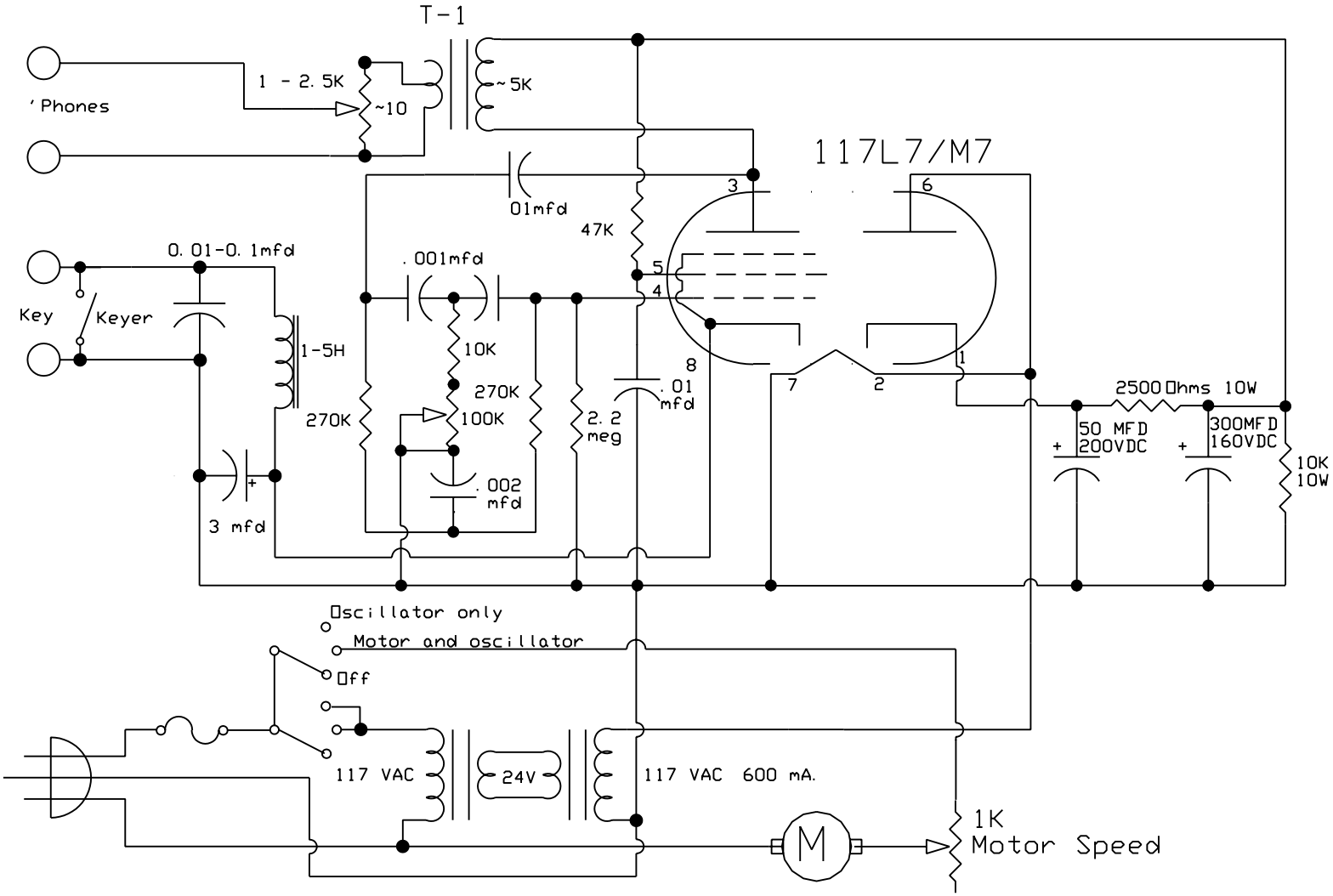
T-1 is NOT critical. Practically any transformer will work here.
A Radio Shack 120 VAC to 12 VAC CT transformer will work fine.